MICRO SWITCH
A DIVISION OF MINNEAPOLIS-HONEYWELL REGULATOR COMPANY
FREEPORT, ILLINOIS
FED. MFR. CODE 91929

SWITCH – BASIC

CATALOG LISTING
BA-2RB

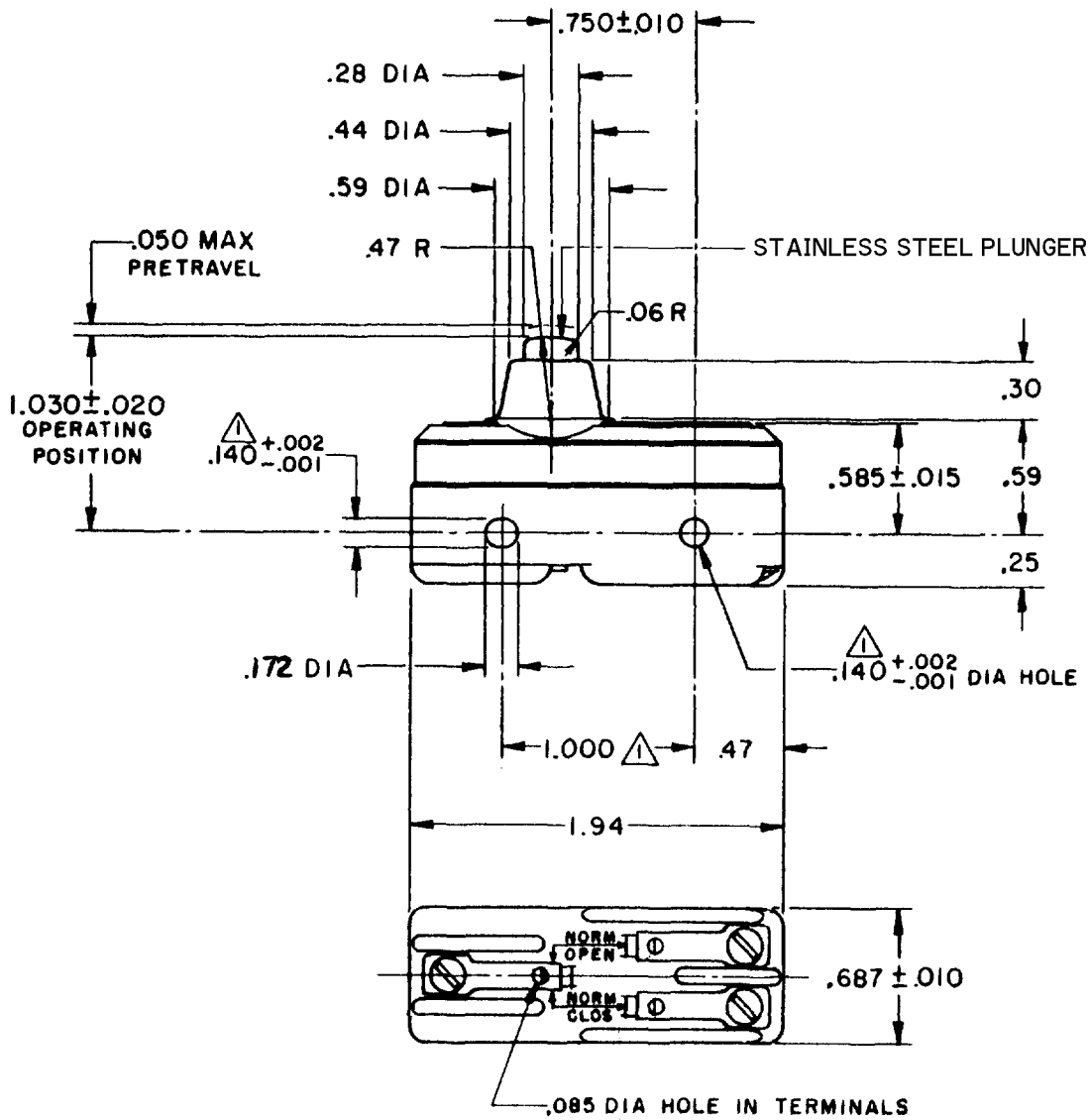

NOTE
1. MOUNTING HOLES WILL ACCEPT PINS OR SCREWS OF .139 MAX DIA ON 1.000 ±.002 CENTERS

THIS DRAWING COVERS A PROPRIETARY ITEM AND IS THE PROPERTY OF MICRO SWITCH, A DIVISION OF MINNEAPOLIS-HONEYWELL REGULATOR CO. THIS DRAWING IS NOT TO BE COPIED OR USED WITHOUT THE APPROVAL OF MICRO SWITCH.

CHARACTERISTICS

OPERATING FORCE — — — — — 14-22 OZ
RELEASE FORCE — — — — — 10 OZ MIN
DIFFERENTIAL TRAVEL — — — .002-.0075
OVERTRAVEL — — — — — — — .094 MIN

ELECTRICAL DATA

CONTACT ARRANGEMENT
S P D T

L23
UNDERWRITERS' LAB. INC. LISTED RATING
20A - 125, 250 OR 480 VAC
10A - 125 VAC "L"
1HP - 125 VAC, 2HP - 250 VAC
1/2A - 125 VDC, 1/4A - 250 VDC

L288
L299
L308
20(3)A 250V ~ T85 5E4

SCALE FULL
DO NOT SCALE PRINT

UNLESS OTHERWISE SPECIFIED
DIMENSIONS ARE IN INCHES
TOLERANCES ARE:

ONE PLACE	(.0)	±.030
TWO PLACE	(.00)	±.015
THREE PLACE	(.000)	±.005
ANGLES		±

WEIGHT .051 LB

(M) BA-2RB ISSUE 4
REPLACES
CATALOG LISTING BA-2RB PAGE 1 OF 1
M
RELEASE NO.
DRAWING NUMBER 10
ISSUE
CHECK

REVISIONS

A	CO 9600	RER 25 APR 60
B	C034310	KPK 20 DEC 74
C	CO 77590	SAD 10 JUN 94
D	C093346	DLT 22 AUG 98
E	CO-94212-C	DLT 20 SEP 99
F	CO-95750-B	CSL 31 MAR 00

CHECK
CHECK
CHECK
DRAWN RER 25 APR 60
FORMTEK
F3-50378